Installation Instruction

Before You Begin

1. Shut off the main water supply.
2. Do not disassemble the main body, as it has been installed & commissioned correctly & precisely before leaving the factory.
3. To avoid the faucet from jamming, DO flush the water pipe before installation.
4. After installation, make sure every joint is safely sealed (NO LEAKAGE).
5. Make sure to connect the hot/cold inlet pipe correctly, if standing in front, hot water pipe connecting to the left and cold water pipe connecting to the right.
6. It is recommended that installation of the product be done by a professional plumber.

Cleaning & Maintenance

To keep product clean and shiny follow the instruction below.
1. Flush with clean water and dry with soft cloth only.
2. Do not use any detergent, polisher, sane-cloth, or a scraper.
3. Do not use acid detergent.

Installation

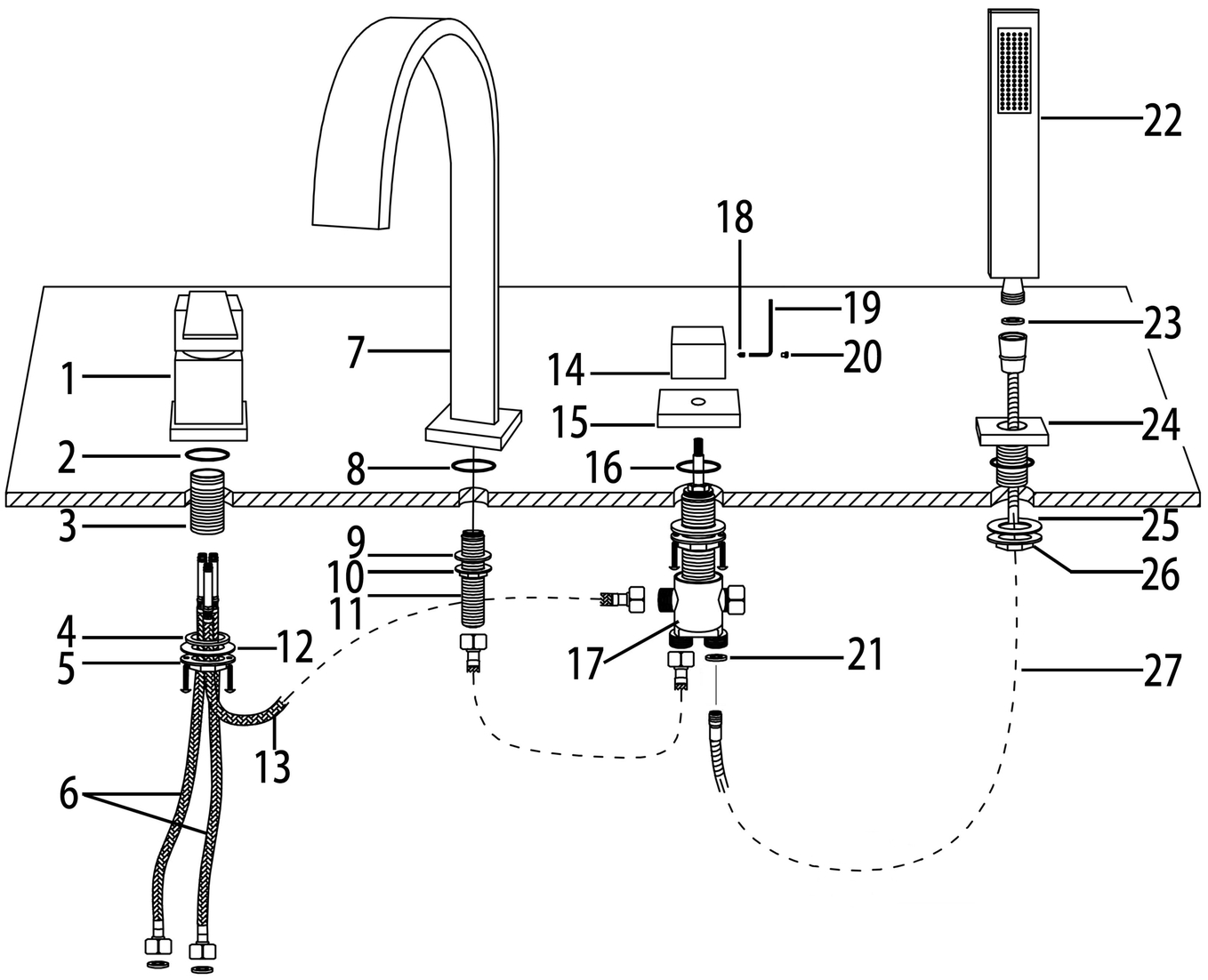

1. handle
2. O-ring
3. threaded pipe
4. rubber washer
5. mounting nut
6. hot&cold waterlines
7. spout body
8. O-ring
9. rubber washer
10. mounting nut
11. threaded pipe
12. poly washer
13. waterline
14. handle
15. base plate
16. O-ring
17. diverter valve
18. set screw
19. allen key
20. indication button
21. rubber washer
22. hand shower
23. rubber washer
24. hand shower holder
25. rubber washer
26. mounting nut
27. shower hose

1. Install the O-ring and insert the handle into the specified drill hole. Screw waterlines into the corresponding screw-hole of the handle through rubber washer, poly washer and mounting nut underneath the counter top. Then, slide washers and mounting nut onto the threaded pipe and secure with screws.
2. Fix O-ring into the bottom groove of the spout body and insert spout body into the specified drill hole on the counter top. Then, install rubber washer to the threaded tail pipe of the spout body from underneath the counter top and screw the mounting nut.
3. Install diverter valve into the specified drill hole underneath the counter top. Screw base plate into the diverter valve and fit the handle. Adjust the height and position of the diverter valve, screw mounting nut , and tighten screws to secure the diverter valve underneath counter top .
4. Tighten set screw with allen key to fix the handle and then put the indication button on.
5. Install the O-ring and insert the hand shower holder into the specified drill hole. Put the rubber washer on and screw in the mounting nut underneath the counter top.
6. Add rubber washer and connect the hose to the hand shower. Put on rubber wahsers and connect the shower hose to the diverter valve. Then, place the weight ball on the shower hose and fit the metal rings into the grooves of weight ball.
7. Connect the waterlines to diverter valve and to spout according to the picture.
8. Connect hot &cold waterlines to main water supply line.